Product Data Sheet:
VIBrail-VIR

Applications

- Vibration reduction of roof-mounted equipment
- Easy roof curb integration
- Standard or high capacity

Features

- Patented system
- Efficient on-site assembly
- Integrated seismic and wind restraints
- Additional restraint stiffener
- Pre-loaded spring assembly
- Aircraft-grade aluminum alloy
- Quick lead time

SOURCED IN USA
MADE IN USA

VIB-ISO
P.O. Box 1022
Wooster, OH 44691
1-800-735-9645

VIBrail-VIR System

The VIBrail-VIR is VIB-ISO's patented isolation rail system designed to sit between an existing roof curb and curb mounted piece of equipment. The VIBrail-VIR is designed to reduce the vibration from a roof curb mounted piece of equipment to the building structure. Additionally, the VIBrail-VIR also acts as a seismic and wind restraint to keep the unit attached to the roof curb. VIB-ISO will engineer each VIBrail-VIR system to match the specified unit and meet any customer requirements. The VIBrail-VIR system is available in either 1" or 2" deflection depending on the customer's requirements. The VIBrail-VIR system is shipped nearly fully assembled with the springs and restraints installed at VIB-ISO in order to reduce onsite labor. On site, the VIBrail-VIR design allows for quick assembly.

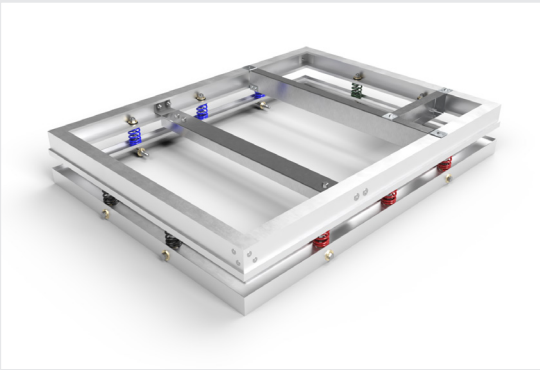

Patented VIBrail-VIR System

VIBrail-VIR Attributes

Why use vibration isolation under your roof-top-units?

Prepackaged RTUs have a number of different components that can create mechanical vibration. Some of these can be individually isolated but most cannot. The simplest and most economical way to solve this issue is to place the entire unit on a vibration isolation rail. The patented VIBrail-VIR system uses coil spring as a resilient media to absorb the vast majority of the vibration energy emanating from the unit. The VIBrail-VIR system was designed using the latest in finite element analysis technology (FEA). The VIBrail-VIR seismic and wind restraints are integrated into the design allowing the rails to be shipped assembled with the restraints installed, thus ensuring proper installation of the restraints.

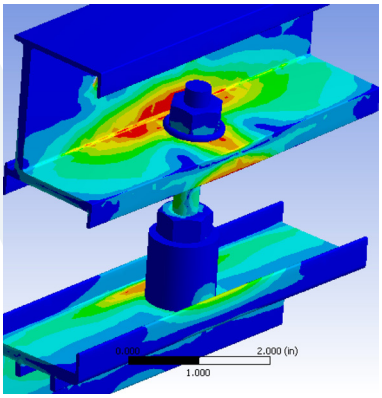

FEA showing the VIBrail-VIR under load

Product Data Sheet:
VIBrail-VIR

VIBrail-VIR Specifications

1. Seismic and wind restraints shall be integrated within the upper and lower rail and assembled by the rail manufacturer to ensure quality.
2. The upper and lower rails shall be made of high strength aluminum to ensure strength and corrosion resistance.
3. The springs must be installed by the manufacturer to ensure proper placement and quality.
4. The upper and lower rails shall be sealed from the environment using a flexible membrane.
5. All connections to the unit shall have flex connectors to ensure proper isolation from the building structure.
6. Curb-mounted roof top equipment shall be isolated by a VIB-ISO patented VIBrail-VIR system.
7. 100% Made in the U.S.A.

Additional Options

- 1" or 2" deflection
- Seismic certification
- Duct supports
- Island supports
- Pipe chase supports

SPRING DATA (INCHES AND POUNDS)			
DEF.	RATING	COLOR	OPER. HT.
1"	30	BLUE	1.5
1"	60	GREEN	1.5
1"	120	RED (SILVER)	1.5
1"	200	BLACK	1.5
2"	30	BLUE	2
2"	60	GREEN	2
2"	120	RED (SILVER)	2
2"	200	BLACK	2

VIBrail-VIR Isometric View

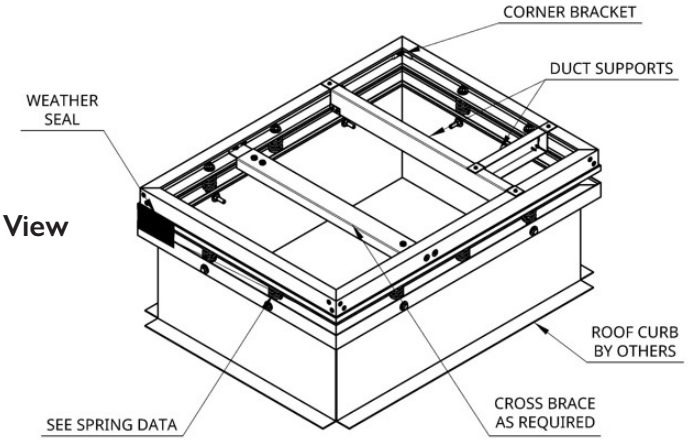

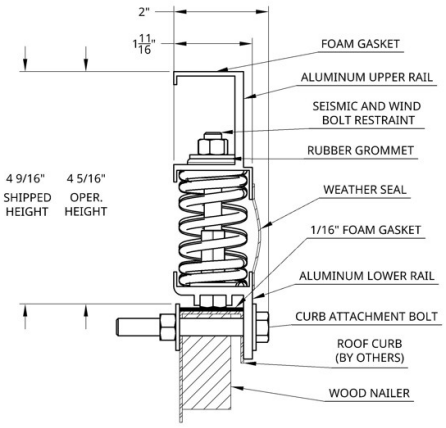

VIBrail-VIR Cross-Section View

For more information regarding the patented VIBrail-VIR system, please visit us at www.vibiso.com.

REV 9/26