## Applications

- Light-duty, low-deflection
- Suspended equipment
- Suspended drop ceilings

## Features

- High-grade steel housing
- Zinc-plated housing
- Elastomeric insert
- Allows 30º misalignment
- Easy installation
- Available in a variety of mounting brackets

SOURCED IN USA
MADE IN USA

**VIB-ISO**
P.O. Box 1022
Wooster, OH 44691
1-800-735-9645

# VIBhanger-MR Isolator

The VIBhanger-MR Isolator is VIB-ISO's light-duty, standard elastomeric vibration reducing hanger isolator. Designed to attach between a building structure and a suspended piece of equipment, piping or ceiling, the VIBhanger-MR will aid to reduce the vibration from mechanical, electrical, plumbing piping systems, and ceilings through to the building structure.

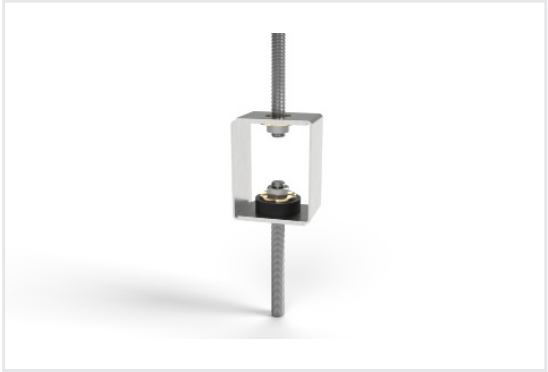

*Assembled VIBhanger-MR Isolator*

Each VIBhanger-MR is comprised of an elastomeric insert, which is also anti-snubbing. This design further reduces the potential for metal-on-metal contact, thus increasing its vibration reduction capabilities and sound dampening attributes.

The VIBhanger-MR can be used individually or in series depending on the size of the piece of equipment, piping or ceiling requiring frequency vibration isolation.

All thread rod (supplied by others) is field adjustable to meet specific on-site requirements of the piece of equipment.

The VIBhanger-MR design allows for quick, on-site assembly requiring only basic tools for installation.

# VIBhanger-MR Attributes

The VIBhanger-MR uses an elastomeric material to absorb the vast majority of vibration energy emanating from suspended pieces of equipment, piping, and dropped ceilings. The VIBhanger-MR design meets all applicable industry standards, codes, and requirements. VIB-ISO's VIBhanger-MR is recommended for isolating suspended equipment with excessive movements that produce vibration concerns including, but not limited to, fans, piping, ductwork, other M/E/P equipment, and dropped ceilings.

Product Data Sheet:
# VIBhanger-MR

## VIBhanger-MR Specifications

1. Anti-short circuit, rubber snubbing elastomeric element.
2. All thread rod (supplied by others).
3. High-grade steel housing.
4. Allows 30º misalignment.
5. Zinc plated housing.
6. 100% Made in the U.S.A.

| ISOLATOR DIMENSIONS (INCHES) | | | | | |
|---|---|---|---|---|---|
| HOUSING | ROD | L | W | T | D |
| MR | 0.375 | 2.10 | 1.50 | 2.75 | 0.69 dia. |

| ELEMENT RATING (POUNDS AND INCHES) | | |
|---|---|---|
| TYPE | RATED | |
| | LOAD | DEFLECTION |
| MR-80 | 80 | 0.09 |
| MR-130 | 130 | 0.04 |

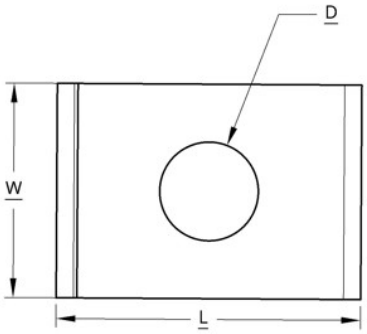


TOP VIEW

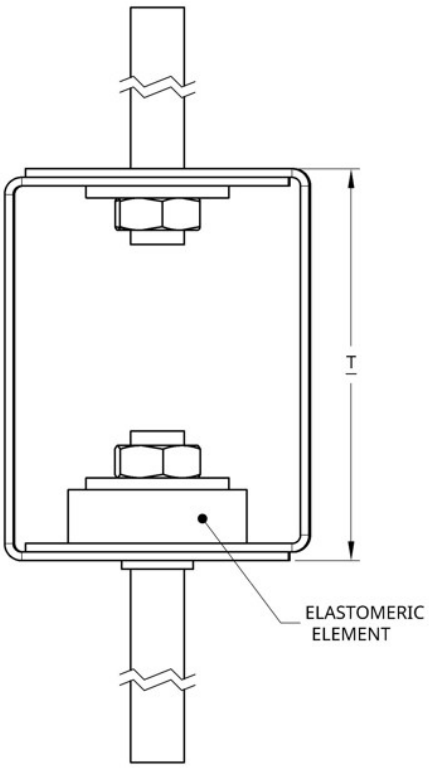


SIDE VIEW

For more information regarding the VIBhanger-MR Isolator, please visit us at www.vibiso.com.

REV 8/26